Longse

5X 8MP Smart Hybrid Light IP Camera

BMMBKL8RC-X5

Ai Function | Full Color | IP67 | SD Card Slot | Built in Mic | Hybrid Light Mode

- Built-in Mic
- WDR
- With Internal POE
- Smart Hybrid light: IR mode, Warm Light Mode and Smart Mode
- Face Detection(not support other AI functions while enable face detection)
- Illegal Parking(based on vehicle shape and license plates)
- License Plate Detection
- Abandoned Object Detection, Removed Object Detection, Heat Map

www.longse.com
marketing@longse.com
No.18, Dongming 3rd Road, Huangpu District, Guangzhou, Guangdong, China

Longse Technology Limited | Longse_Group | Longse Technology | Longse Technology | Longse_Group

© 2006-2026 Longse Technology Limited All Rights Reserved. Data Subject To Change Without Notice.

Camera	
Image Sensor	1/2.8" SONY Starvis Back-illuminated CMOS sensor
Resolution	8MP
Effective Pixels	3864(H)*2192(V)
Compression	H.264/H.264+/H.265/H.265+
Audio Compression	G711A/U,AAC,MP2L2
TV System	PAL/NTSC
Electronic Shutter Time	Auto: 1/3-1/100000Sec
Minimun Illumination	Color: 0.005 Lux@(F1.6, AGC ON), 0 Lux with white light, B/W: 0 Lux with IR
S/N Ratio	60dB
Scanning System	Progressive
Video Output	Network
Reset Button	Optional
Lens	
Focal Length & FOV	F1.6~F3.3, horizontal FOV 108~30°, vertical FOV 59~18, diagonal FOV 130~34°
Lens Type	2.7~13.5mm
Focus Control	Auto Control
Aperture	F1.6
Pixels	AF-8MP
Night Vision	
Supplement Light	IR: 4PCS, Warm light: 4PCS
Supplement Light Distance	IR: 40m, Warm light: 30m
Supplement Light Status	Auto Control
Supplement Light Power On	Smart, Manual & Timed mode
Network	
Ethernet	RJ-45 (10/100Base-T)
Wireless	N/A
Protocol	TCP/IP, IPv4/v6, ICMP, HTTP, HTTPS, FTP, DHCP, DNS, DDNS, RTP, RTSP, RTMP, RTCP, PPPoE, NTP, SMTP, UDP, SNMP, Qos, 802.1x
ONVIF	Support ONVIF 24.12(Profile S/T/G/M)
P2P	YES
POE	Internal, Support IEEE 802.3af
Video Delay	300ms (Within the Lan)
Main Stream 1	3840*2160@25fps
Main Stream 2	2560*1440@25fps
Main Stream 3	1920*1080@25fps 1280*720@25fps
Sub Stream 1	1280*720@25fps
Sub Stream 2	720*480@25fps
Sub Stream 3	N/A
Tri Stream	N/A
IE Brower	Microsoft Edge, IE11, Google Chrome, Firefox, Mac Safari
Smart Phone	iPhone, Android

© 2006-2026 Longse Technology Limited All Rights Reserved. Data Subject To Change Without Notice.

AI Function	
Intelligent Analysis	Intrusion Detection/Line Crossing Detection/Enter Area Detection/Leave Area Detection/Line Crossing Count(based on human, vehicle and non-motor vehicle detection), Loitering Detection/People Gathering Detection(based on human detection), Motion Detection(supports the detection based on human, vehicle and non-motor vehicle movement), Face Detection(not support other AI functions while enable face detection), Illegal Parking(based on vehicle shape and license plates), License Plate Detection, Abandoned Object Detection, Removed Object Detection, Heat Map
Camera Features	
Day/Night	Color/ B&W (IR-CUT)
Image Config	Saturation/Brightness/Contrast /Sharpness, Mirror, 3D NR , White Balance, Anti Flicker, Video Tampering, HLC, Scene Change Detection
Full Color	Support
Corridor Pattern	Support
Defog Mode	N/A
ROI	Support
BLC	Support
WDR	120dB
Motion Detection	Support(support enable the detection based on human and Vehicle movement)
Privacy Masking	3 Rectangular Zone
Recording Mode	NVR/CMS/Web
Language	Chinese Simplified, Chinese Traditional, English, Korean, Polish, French, Japanese, Spanish, Portuguese, Italian, Hebrew, Ukrainian, Arabic, Vietnamese, Thai, Hungarian, Czech
Interface	
Audio	Default: Built in Mic Option: Audio I/O
Alarm	N/A
SD Card Slot	Default: External SD card slot (Max 512GB)
RS485	N/A
General	
Housing	Metal , IP67
Anti-cut Bracket	NO
IR Cut Filter	YES
Operation Temperature	-30℃ ~ +60℃ RH95% Max
Storage Temperature	-30℃ ~ +60℃ RH95% Max
Power Source	DC12V±10%, 950mA
Dimension	268(W) x 95(H) x 88(D)mm
Weight (N.W./G.W.)	Approx. 1200 g / Approx. 1400 g

© 2006-2026 Longse Technology Limited All Rights Reserved. Data Subject To Change Without Notice.

Dimensions (mm)

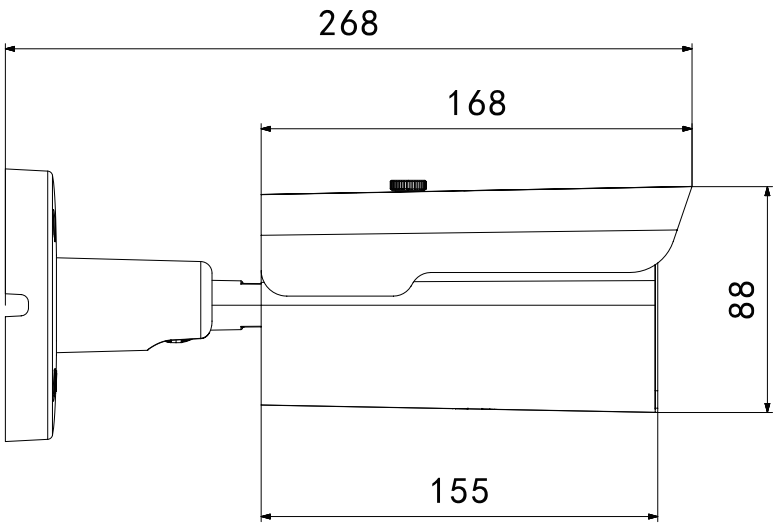

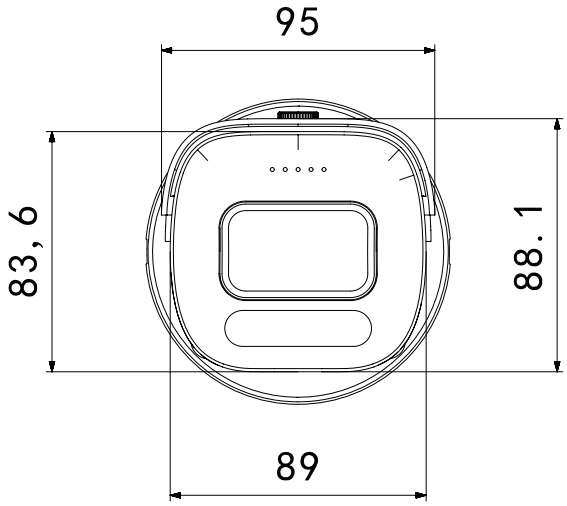

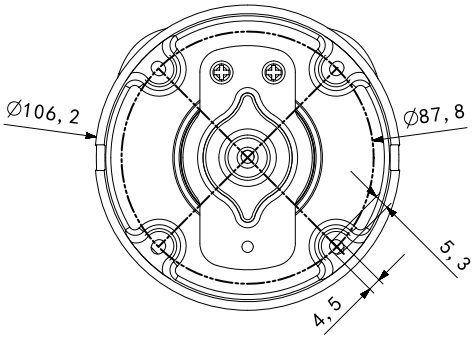

Optional Accessories

B320
Junction BOX

© 2006-2026 Longse Technology Limited All Rights Reserved. Data Subject To Change Without Notice.