Longse

# 8MP Smart Hybrid Light IP Camera

**BMMBKL8RC**

Ai Function | WDR | IP67 | SD Card Slot | Built-in Mic

- Built-in Mic
- WDR
- With Internal POE
- Smart Hybrid light: IR mode, Warm Light Mode and Smart Mode
- Face Detection(not support other AI functions while enable face detection)
- Illegal Parking(based on vehicle shape and license plates)
- License Plate Detection
- Abandoned Object Detection, Removed Object Detection, Heat Map

www.longse.com
marketing@longse.com
No.18, Dongming 3rd Road, Huangpu District, Guangzhou, Guangdong, China

Longse Technology Limited | Longse_Group | Longse Technology | Longse Technology | Longse_Group

© 2006-2026 Longse Technology Limited All Rights Reserved. Data Subject To Change Without Notice.

| Camera | |
|---|---|
| Image Sensor | 1/2.8" SONY Starvis Back-illuminated CMOS sensor |
| Resolution | 8MP |
| Effective Pixels | 3864(H)*2192(V) |
| Compression | H.264/H.264+/H.265/H.265+ |
| Audio Compression | G711A/U,AAC,MP2L2 |
| TV System | PAL/NTSC |
| Electronic Shutter Time | Auto: 1/3-1/100000Sec |
| Minimun Illumination | Color: 0.005 Lux@(F1.6, AGC ON), 0 Lux with white light, B/W: 0 Lux with IR |
| S/N Ratio | 60dB |
| Scanning System | Progressive |
| Video Output | Network |
| Reset Button | Optional |
| **Lens** | |
| Focal Length & FOV | 2.8 mm, horizontal FOV 96°, vertical FOV 52°, diagonal FOV 114°<br>4 mm, horizontal FOV 84°, vertical FOV 48°, diagonal FOV 97°<br>6 mm, horizontal FOV 53°, vertical FOV 30°, diagonal FOV 60° |
| Lens Type | Fixed focal lens, 2.8, 4 mm and 6 mm optional |
| Focus Control | Fixed |
| Aperture | F1.6 |
| Pixels | 8MP |
| **Night Vision** | |
| Supplement Light | IR: 4PCS, Warm light: 5PCS |
| Supplement Light Distance | IR: 40m, Warm light: 30m |
| Supplement Light Status | Auto Control |
| Supplement Light Power On | Smart, Manual & Timed mode |
| **Network** | |
| Ethernet | RJ-45 (10/100Base-T) |
| Wireless | N/A |
| Protocol | TCP/IP, IPv4/v6, ICMP, HTTP, HTTPS, FTP, DHCP, DNS, DDNS, RTP, RTSP, RTMP, RTCP, PPPoE, NTP, SMTP, UDP, SNMP, Qos, 802.1x |
| ONVIF | Support ONVIF 24.12(Profile S/T/G/M) |
| P2P | YES |
| POE | Internal, Support IEEE 802.3af |
| Video Delay | 300ms (Within the Lan) |
| Main Stream 1 | 3840*2160@25fps |
| Main Stream 2 | 2560*1440@25fps |
| Main Stream 3 | 1920*1080@25fps<br>1280*720@25fps |
| Sub Stream 1 | 1280*720@25fps |
| Sub Stream 2 | 720*480@25fps |

© 2006-2026 Longse Technology Limited All Rights Reserved. Data Subject To Change Without Notice.

| | |
|---|---|
| Sub Stream 3 | N/A |
| Tri Stream | N/A |
| IE Brower | Microsoft Edge, IE11, Google Chrome, Firefox, Mac Safari |
| Smart Phone | iPhone, Android |
| **AI Function** | |
| Intelligent Analysis | Intrusion Detection/Line Crossing Detection/Enter Area Detection/Leave Area Detection/Line Crossing Count(based on human, vehicle and non-motor vehicle detection), Loitering Detection/People Gathering Detection(based on human detection), Motion Detection(supports the detection based on human, vehicle and non-motor vehicle movement), Face Detection(not support other AI functions while enable face detection), Illegal Parking(based on vehicle shape and license plates), License Plate Detection, Abandoned Object Detection, Removed Object Detection, Heat Map |
| **Camera Features** | |
| Day/Night | Color/ B&W (IR-CUT ) |
| Image Config | Saturation/Brightness/Contrast /Sharpness, Mirror, 3D NR , White Balance, Anti Flicker, Video Tampering, HLC, Scene Change Detection |
| Full Color | Support |
| Corridor Pattern | Support |
| Defog Mode | N/A |
| ROI | Support |
| BLC | Support |
| WDR | 120dB |
| Motion Detection | Support(support enable the detection based on human and Vehicle movement) |
| Privacy Masking | 3 Rectangular Zone |
| Recording Mode | NVR/CMS/Web |
| Language | Chinese Simplified, Chinese Traditional, English, Korean, Polish, French, Japanese, Spanish, Portuguese, Italian, Hebrew, Ukrainian, Arabic, Vietnamese, Thai, Hungarian, Czech |
| **Interface** | |
| Audio | Default: Built in Mic<br>Option: Audio I/O |
| Alarm | N/A |
| SD Card Slot | Default: External SD card slot (Max 512GB) |
| RS485 | N/A |
| **General** | |
| Housing | Metal , IP67 |
| Anti-cut Bracket | NO |
| IR Cut Filter | YES |
| Operation Temperature | -30℃ ~ +60℃ RH95% Max |
| Storage Temperature | -30℃ ~ +60℃ RH95% Max |
| Power Source | DC12V±10%,950mA |
| Dimension | 95 x 88.1 x 268 mm |
| Weight (N.W./G.W.) | Approx. 1200 g / Approx. 1400 g |

© 2006-2026 Longse Technology Limited All Rights Reserved. Data Subject To Change Without Notice.

# Dimensions (mm)

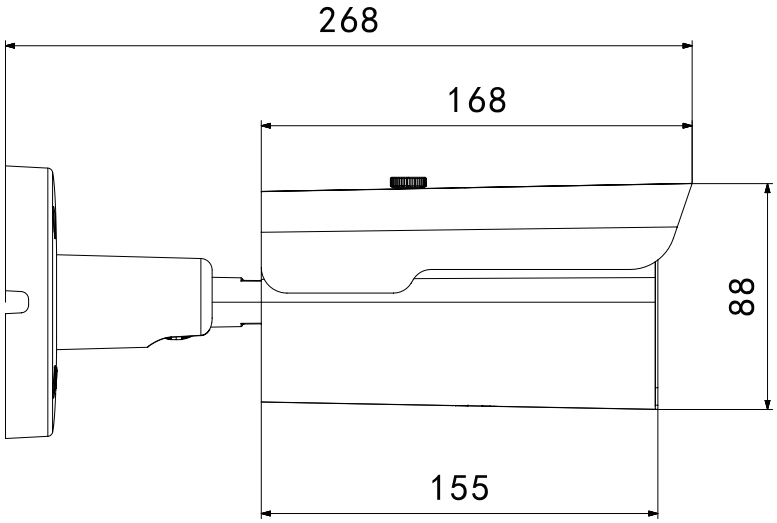


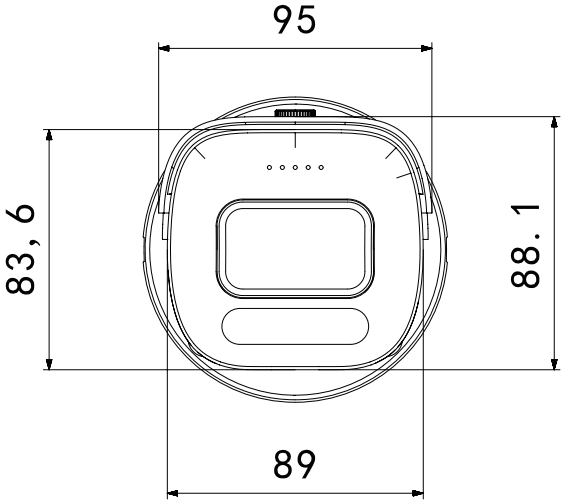


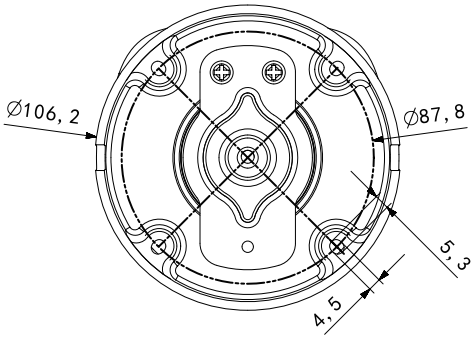


# Optional Accessories

B320
Junction BOX

© 2006-2026 Longse Technology Limited All Rights Reserved. Data Subject To Change Without Notice.